Print Phase – 3

All files are in this drive folder: Phase_3_Files

***The print orientation is shown in pictures. If the parts fail to print in that orientation, you may change the orientation.

1. Bearing Mount

file Name: bearingMount.STL
Link: bearingMount
Infill: 18%
Color: White
Precision (Flowrate): Medium (Medium)
Material: PETG
Quantity: 1

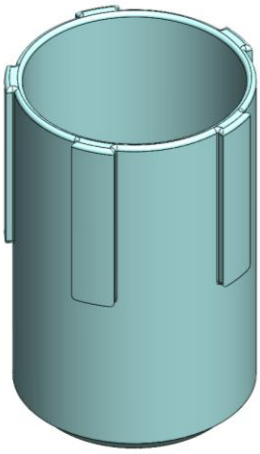

2. Fastner

file Name: fastner.STL
Link: fastner
Infill: 18 %
Color: White
Precision (Flowrate): Low (Fast)
Material: PETG
Quantity: 2

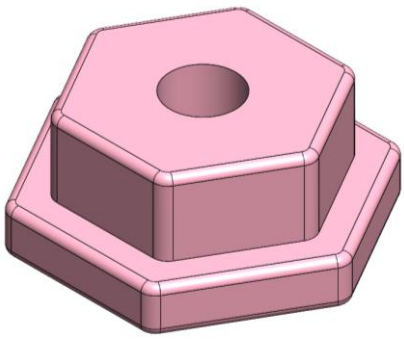

3. Electrical Box

file Name: electricalBox.STL
Link: electricalBox
Infill: 18%
Color: White
Precision (Flowrate): Low (Fast)
Material: PETG
Quantity: 1

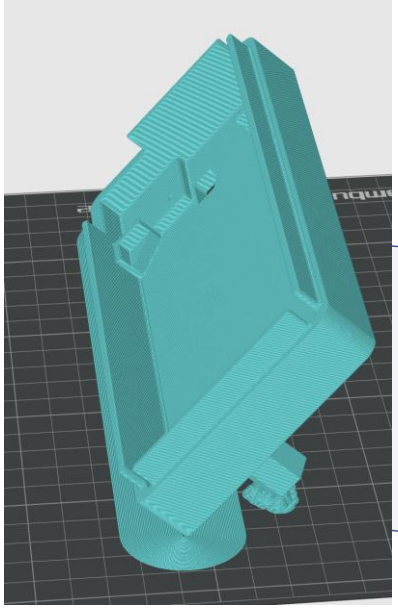

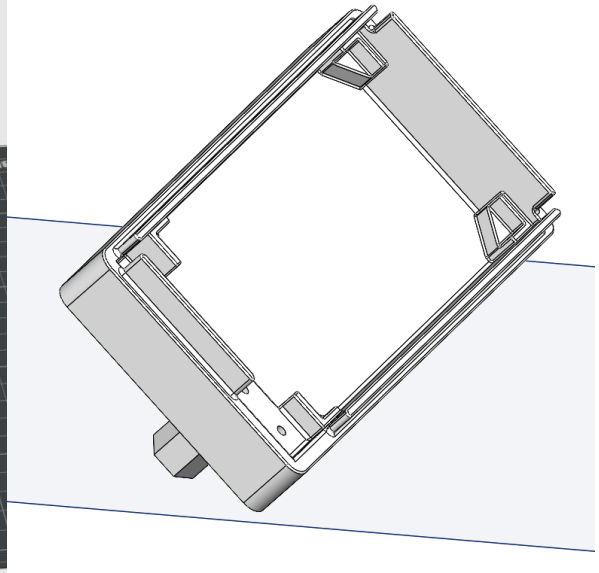

4. Electrical Box Lid

file Name: electricalBoxLid.STL
Link: electricalBoxLid
Infill: 18%
Color: White
Precision (Flowrate): Low (Fast)
Material: PETG
Quantity: 1

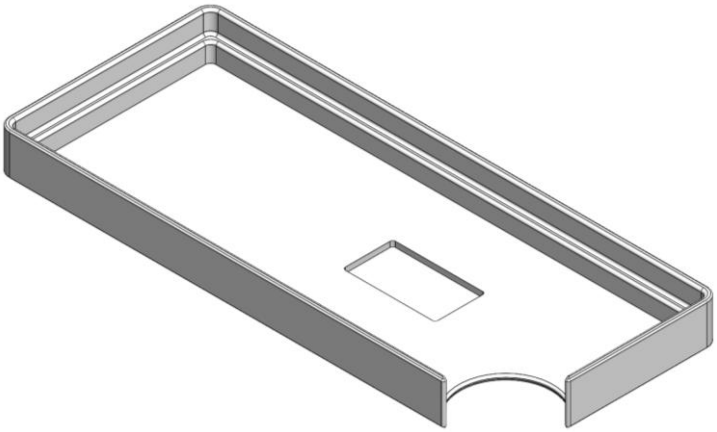

5. Knob

file Name: knob.STL
Link: knob
Infill: 15%
Wall Loops: 5
Sparse infill Pattern: 3D honeycomb
Color: White
Precision (Flowrate): Medium (Medium)
Material: PETG
Quantity: 1

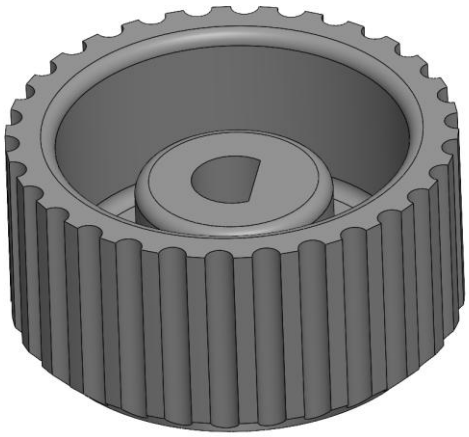

6. Fastner4x

file Name: fastner4x.STL
Link: fastner4x
Infill: 18%
Color: White
Precision (Flowrate): Low (Fast)
Material: PETG
Quantity: 1

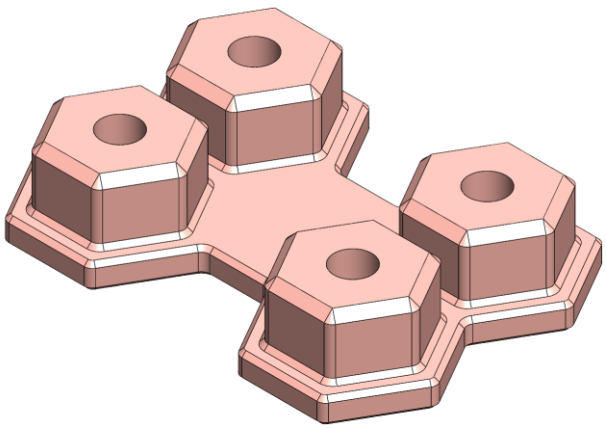

7. Mount Stand

file Name: mountStand.STL
Link: mountStand
Infill: 18%
Color: White
Precision (Flowrate): Low(Fast)
Material: PETG
Quantity: 1

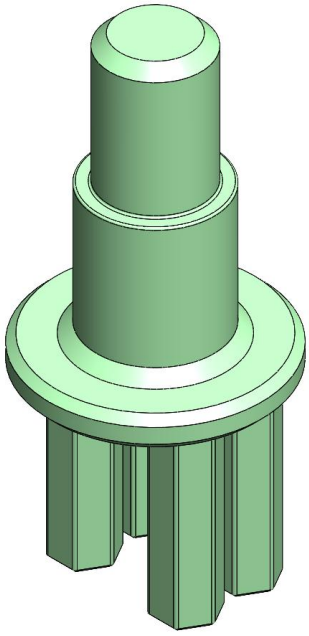

8. Spool

file Name: Spool.STL
Link: Spool
Infill: 15%
Wall Loops: 5
Sparse infill Pattern: 3D honeycomb
Color: White
Precision (Flowrate): Medium (Medium)
Material: PETG
Quantity: 1

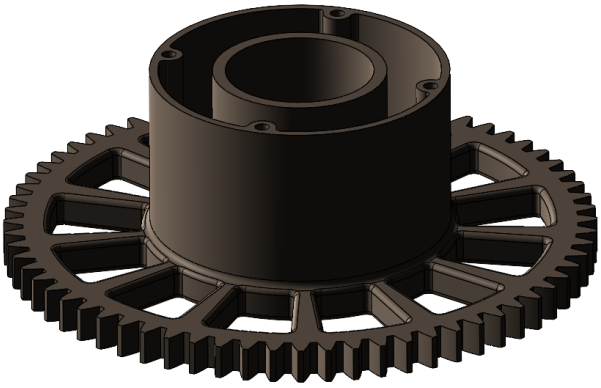

9. Spool Plate

file Name: spoolPlate.STL
Link: spoolPlate
Infill: 18%
Color: White
Precision (Flowrate): Low (Fast)
Material: PETG
Quantity: 1

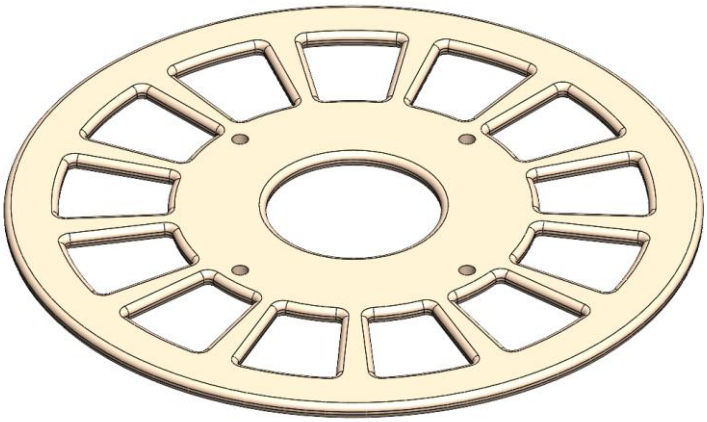

10. Spur Gear

file Name: spurGear.STL
Link: spurGear
Infill: 15%
Wall Loops: 5
Sparse infill Pattern: 3D honeycomb
Color: White
Precision (Flowrate): Medium (Medium)
Material: PETG
Quantity: 1

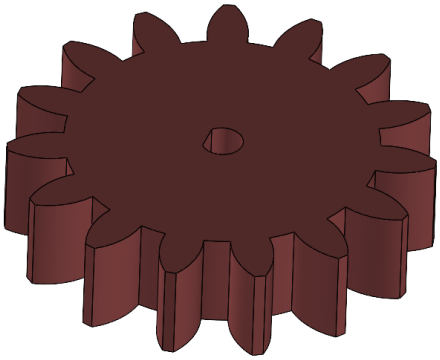

11. Fastner
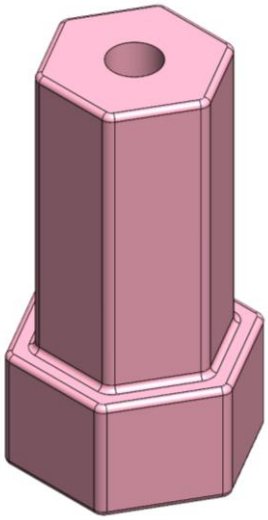
file Name: fastner_1.STL
Link: fastner_1
Infill: 18%
Color: White
Precision (Flowrate): High (Low)
Material: PETG
Quantity: 2